INSTRUCTIONS FOR SYNCHRONIZING PERISCOPIC SIGHTING DEVICE
WITH COMBINATION GUN MOUNTS M3U AND M3UA1 IN MEDIUM TANK M4 SERIES

FOR MANUFACTURER'S USE ONLY

EQUIPMENT:

GUNNER'S QUADRANT.
ADJUSTING TARGETS NO. 1 & 2.
CROSS-HAIR MUZZLE PLUG OR BLACK THREAD AND SCOTCH TAPE OR RUBBER BAND.
PLUG FOR BREECH END OF GUN WITH 1/16" DIAMETER HOLE IN CENTER.
PLUMB BOB.
PERISCOPE M4.

PROCEDURE:

1. PLACE THE TURRET ON AN ABSOLUTELY LEVEL STAND WHICH MOUNTS A COMPLETE TURRET RING SO THAT THE TURRET MAY BE TRAVERSED.

2. ELEVATE THE GUN TO ZERO DEGREES AS DETERMINED BY THE GUNNER'S QUADRANT PLACED ON THE BREECH. (NOTE: WHEN USING THE GUNNER'S QUADRANT, KEEP THE LEVELING SHOES PARALLEL WITH THE BORE OF THE GUN AND IN THE SAME PLACE EACH TIME.)

3. INSTALL THE BREECH AND MUZZLE PLUGS IN THE TUBE. IF A MUZZLE PLUG IS NOT ON HAND, STRETCH THE BLACK THREAD TIGHTLY ACROSS THE MUZZLE AT THE HORIZONTAL AND VERTICAL MARKS AND FASTEN IN PLACE WITH THE TAPE, RUBBER BAND OR OTHER SUITABLE MEANS. MAKE SURE THE THREAD IS NOT LOOSE.

4. LOCATE TARGET NO. 1 EXACTLY 420 INCHES FROM THE GUN MOUNT TRUNNION AS SHOWN IN FIGURE I. THIS SHOULD BE DONE WITH STEEL TAPE AND THE DISTANCE MEASURED TO THE FACE OF THE TARGET. ADJUST THE TARGET UNTIL THE GUN IS ACCURATELY BORE-SIGHTED ON TARGET G1 AND THE TARGET IS EXACTLY VERTICAL AS DETERMINED BY THE PLUMB BOB. FASTEN TARGET SECURELY IN PLACE, THEN RECHECK TO MAKE SURE IT IS ACCURATELY BORE-SIGHTED AND VERTICAL.

5. LOCATE TARGET NO. 2 EXACTLY ABOVE TARGET NO. 1 SO THAT THE DISTANCE BETWEEN G1 AND G2 IS 136.466 INCHES AND THE TARGETS ARE IN LINE AS DETERMINED WITH THE PLUMB BOB, FIRST CHECKING G1 AND G2 THEN P1 AND P2. (NOTE: - IF, FOR ANY REASON, IT IS FOUND NECESSARY TO DEVIATE FROM THE DISTANCE OF 420 INCHES AS DIRECTED IN STEP 4, THE DISTANCE BETWEEN THE TARGETS WILL CHANGE AND IT WILL BE NECESSARY TO CALCULATE THE CORRECT DIMENSION.) IF THE TARGETS ARE CORRECTLY LOCATED AND THE TURRET IS LEVEL, THE GUN WILL NOW TRACK THROUGH G1 AND G2. WITH THE GUN AIMED AT G2, PLACE THE GUNNER'S QUADRANT ON THE BREECH. THE ELEVATION SHOULD BE EXACTLY 18°.

6. SET THE "ELEV." AND "DEF." ADJUSTMENTS ON THE PERISCOPE AT ZERO GRADUATIONS. INSTALL THE PERISCOPE IN ITS HOLDER, MAKING SURE THAT IT IS FIRMLY HELD IN PLACE.

7. WITH THE GUN BORE-SIGHTED ON G1 THE PERISCOPE SHOULD NOW SIGHT ON THE VERTICAL LINE THROUGH P1. IF IT DOES NOT, BRING IT TO BEAR BY MEANS OF THE "DEF." ADJUSTMENT OF THE PERISCOPE. THE PERISCOPE SHOULD NOW TRACK THROUGH P1 AND P2 WHEN THE GUN IS ELEVATED. IF IT DOES NOT, IT IS AN INDICATION THAT THE GUN AND PERISCOPE TRUNNIONS ARE NOT EXACTLY PARALLEL IN BOTH THE PLAN AND FRONT ELEVATION PLANES. THIS FAULT IS DUE TO INCORRECT MACHINING OF GUN MOUNT MOUNTING SURFACE AND PERISCOPE BEARING MOUNTING SURFACES ON THE TURRET.

8. LOOSEN NUT "C" AND SCREW "D". TURN ADJUSTING CAM "E" UNTIL SCREW "D" IS IN THE APPROXIMATE CENTER OF SLOT IN ADJUSTING LEVER "F". (FIG. II) TIGHTEN THE NUT AND SCREW.

9. LOOSEN THE CONNECTING ROD JAM NUTS "A", THEN BORE-SIGHT THE GUN ON TARGET G2. LENGTHEN OR SHORTEN THE CONNECTING ROD "B" UNTIL THE PERISCOPE IS AIMED AT THE CENTER OF TARGET P2. (SEE FIGURE II)

10. DEPRESS THE GUN UNTIL IT IS BORE-SIGHTED ON TARGET G1. NOTE THE ERROR OF ELEVATION OF THE PERISCOPE BY OBSERVING THE LOCATION OF THE HORIZONTAL LINE TO THE LEFT OF THE CIRCLE IN THE PERISCOPE SIGHT, IN RELATION TO THE GRADUATIONS AT THE LEFT OF TARGET P1. INCREASE THIS ERROR ABOUT 10 TIMES BY LENGTHENING OR SHORTENING THE CONNECTING ROD. TIGHTEN THE JAM NUTS. (FIG. II)

11. LOOSEN NUT "C" AND SCREW "D", THEN TURN CAM "E" UNTIL THE PERISCOPE IS ACCURATELY AIMED AT P1. TIGHTEN THE SCREW AND NUT THEN CHECK TO SEE THAT BOTH THE GUN AND PERISCOPE ARE STILL CORRECTLY AIMED. (FIG. II) THE PERISCOPIC SIGHT SHOULD NOW BE IN SYNCHRONISM WITH THE GUN.

12. ELEVATE THE GUN UNTIL IT IS BORE-SIGHTED ON TARGET G2. THE PERISCOPE SHOULD NOW BE CORRECTLY AIMED AT P2. IF IT IS NOT, REPEAT STEPS 8 TO 11 INCLUSIVE. FOR THE FINAL CHECK, MAKE CERTAIN THAT WHEN THE GUN IS EXACTLY BORE-SIGHTED ON TARGET G1, THE PERISCOPE IS EXACTLY AIMED AT CENTER OF TARGET P1.

13. WHENEVER THE GUN MOUNT, PERISCOPE HOLDER MOUNT, THE CAM ADJUSTMENT, OR THE CONNECTING ROD LENGTH IS DISTURBED OR CHANGED, THE ABOVE PROCEDURE MUST BE FOLLOWED THROUGH TO OBTAIN AN ACCURATE SIGHTING DEVICE.

* NOTE: 18° = 320 MILS

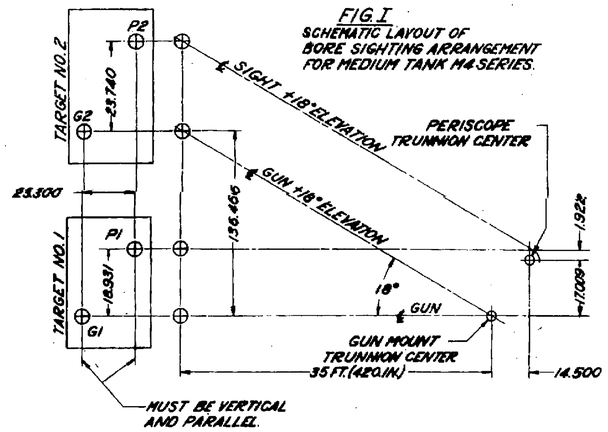

FIG. I
SCHEMATIC LAYOUT OF BORE SIGHTING ARRANGEMENT FOR MEDIUM TANK M4 SERIES.

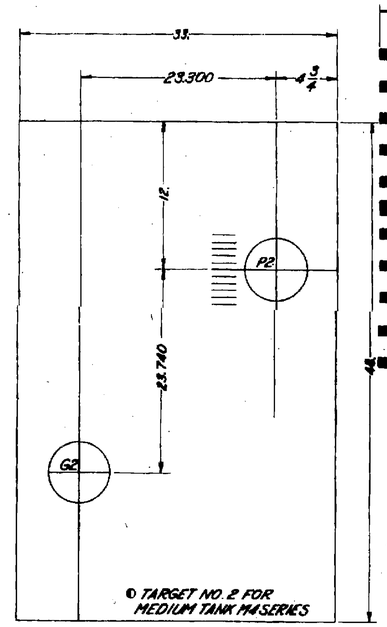

© TARGET NO. 2 FOR MEDIUM TANK M4 SERIES

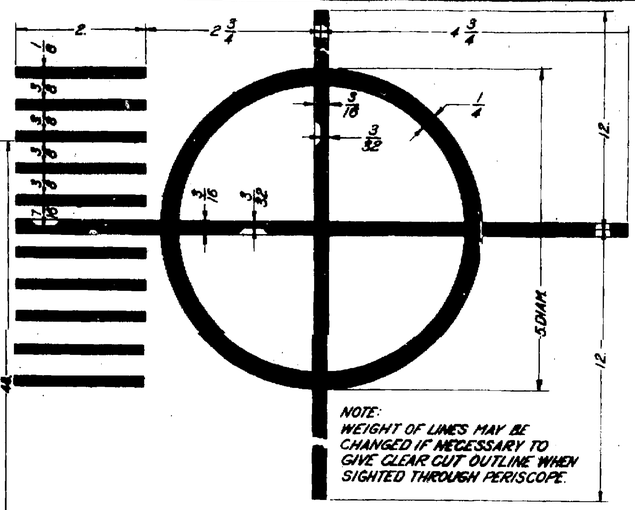

NOTE:
WEIGHT OF LINES MAY BE CHANGED IF NECESSARY TO GIVE CLEAR CUT OUTLINE WHEN SIGHTED THROUGH PERISCOPE.

BACKGROUND: NON-REFLECTING FLAT WHITE
TARGET: FLAT BLACK

TARGET FOR +18° ELEVATION

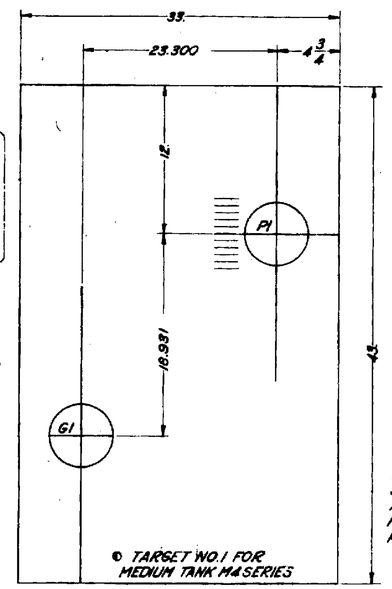

© TARGET NO. 1 FOR MEDIUM TANK M4 SERIES

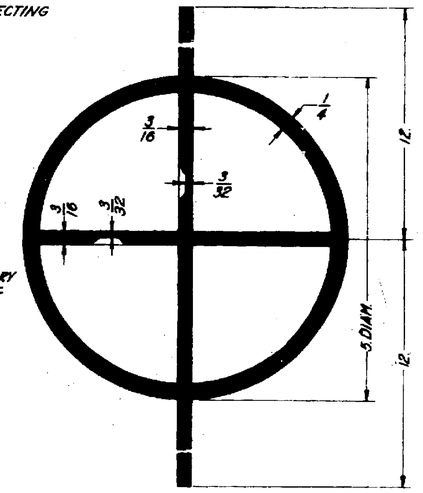

NOTE:
WEIGHT OF LINES MAY BE CHANGED IF NECESSARY TO GIVE CLEAR CUT OUTLINE WHEN SIGHTED THROUGH GUN.

NOTE:
DECIMAL DIMENSIONS SHOWN ON ABOVE TARGETS ARE NOMINAL MEASUREMENTS. MAY BE CAREFULLY MADE WITH A STEEL SCALE.

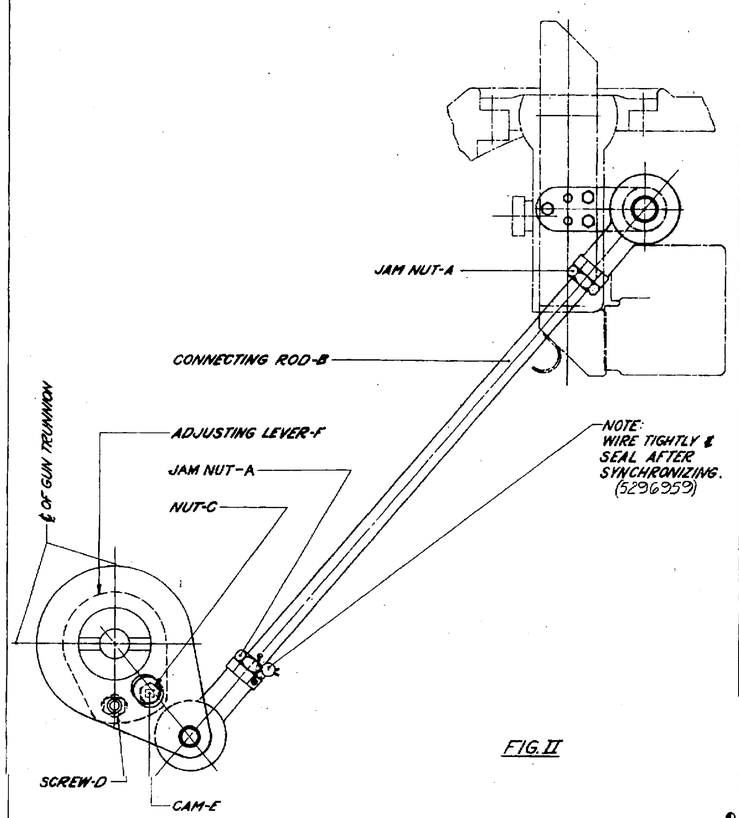

FIG. II

TARGET FOR 0° ELEVATION

NOTE: MAKE TARGETS FROM FLAT, RIGID, NON-SHRINKING AND NON-WARPING MATERIAL.

© TO BE LETTERED ON TARGET

SYM	DESCRIPTION	DATE	APPROVAL
3	WAS "D" SIZE	6-9-54	
2	REDRAWN NOW		
1		5-11-53	

REVISIONS

ORIGINAL DATE OF DRAWING	JAN 30, 1943
DRAFTSMAN	NEB
TRACER	
ENGINEER	
SUBMITTED	ORD CORPS
APPROVED	ORD CORPS
TOLERANCES ON DECIMALS	± .005
ANGLES	± 1°
FRACTIONS	± 1/64
MATERIAL	SEE NOTES
HEAT TREATMENT	
FINAL PROTECTIVE FINISH	
CHECKER	C.W.F.
CHECKER	
ENGINEER	
SCALE	1/1
UNIT WT	

PHYSICAL PROPERTIES: TP, TS, EL 1, RA, BH, BH

NEXT ASSY | USED ON
APPLICATION
DO NOT | APPLY PART NO.

TARGET, GUN
6578178

ORDNANCE CORPS
DEPT OF THE ARMY
DETROIT ARSENAL

SIZE F | 6578178 | SHEET ___ OF ___

6578178 C.W.F.